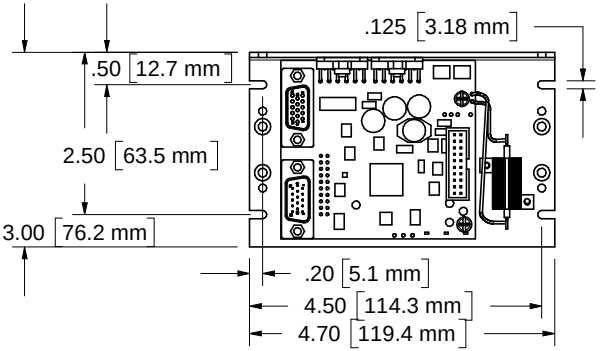
.125 [3.18 mm]
.50 [12.7 mm]
2.50 [63.5 mm]
3.00 [76.2 mm]
.20 [5.1 mm]
4.50 [114.3 mm]
4.70 [119.4 mm]

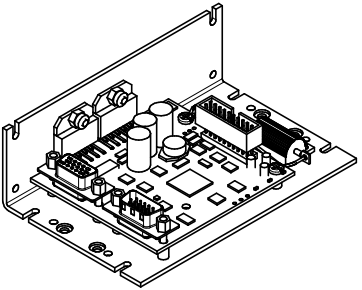

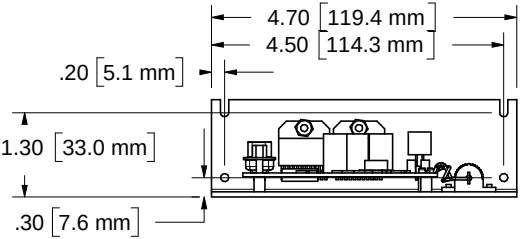
4.70 [119.4 mm]
4.50 [114.3 mm]
.20 [5.1 mm]
1.30 [33.0 mm]
.30 [7.6 mm]

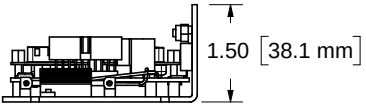
1.50 [38.1 mm]